WS200 Dimensional Drawings:
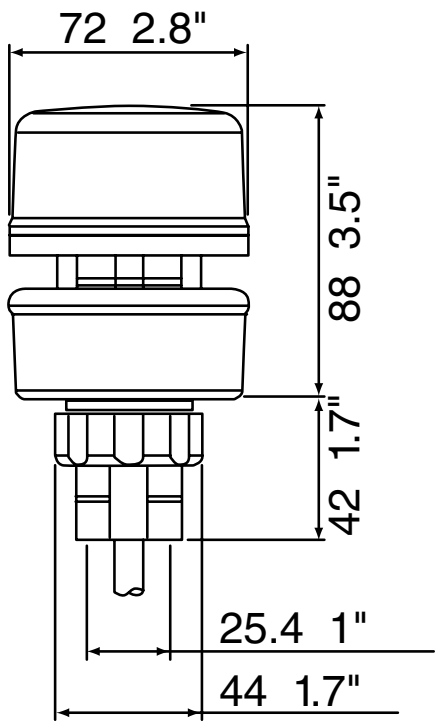
Weather Station WS200 0.3 kg 0.66 lb